DURA FAUCET®

DF-PB150A – RV Designer Bar Faucet with 6-inch Spout

MAINTENANCE AND CLEANING

Cleaning Tips: The finish on your product is designed to retain its beautiful sheen for years. To maintain the original look of the finish, a little care and caution should be used. We recommend the use of mild soap and water to clean the product.

THE USE OF ABRASIVE CLEANERS MAY SCRATCH THE FINISH OR CAUSE OTHER DAMAGE.

RECOMMENDED TOOLS AND MATERIALS

- Plumber's Tape
- Adjustable Wrench

BEFORE YOU BEGIN

There are a variety of things to do before installing any new plumbing system into your RV. Before you begin work make sure you:

- Shut off the main water supply
- Cover your drain to prevent loss of parts
- Observed any local plumbing codes
- Inspect fixture for damage - Replace as necessary

* Dura Faucet reserves the right to make any revisions in the design of products without notice.

INSTALLATION OF THE FAUCET

1 New Faucet Installation

Completely shut off the water supply. Remove the old faucet by disconnecting it from the water supply tubes under the sink and then unscrewing the faucet from the counter top by removing the mounting nuts. Clean the sink's top surface in preparation for installation of the new faucet.

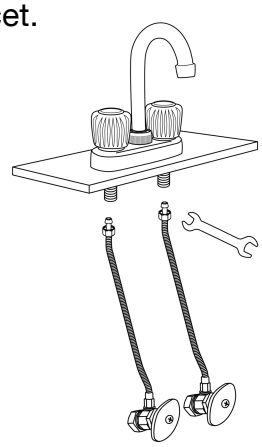

2 Install Faucet on Sink Top

Attach the base plate to the faucet (make sure the stamped words on the plate are facing down), and then place the faucet in position on the sink top.

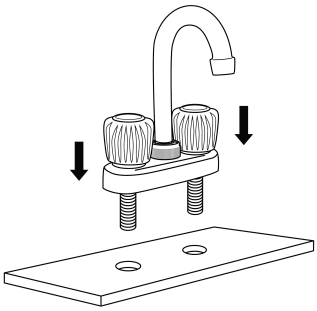

3 Install Faucet Under Sink

Screw the provided locknuts upward from under the sink onto faucet connectors using your hands only. Tighten the nuts alternating until they are nearly flush with the underside of the sink top. Then, align the faucet as desired. While maintaining set alignment, tighten down the locknuts to lock faucet into place.

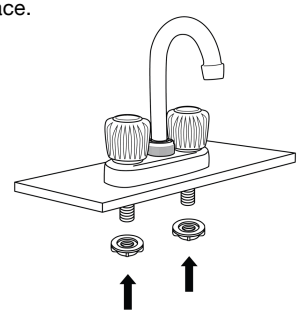

4 Connect to Water Supply

Last step is to connect to the water supply. Remove the aerator and turn the water supply on and allow both the hot and cold water to run for 30 to 60 seconds. While the water is running, check for leaks around and under the sink. Once finished, reinstall the aerator. Now your new Dura Faucet is ready to use.

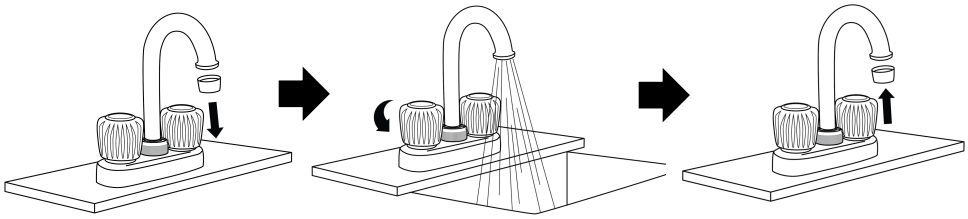

SPEC DRAWING / PARTS

1. Brass Spout
2. ABS Spout Nut
3. POM C-Ring
4. Rubber O-Rings (2)

5A. Acrylic/Al C-Button
5C. ABS Bases (2)
6A. Acrylic/Al H-Button
6C. ABS Handles (2)
7A. Stainless Steel Handle Screws (2)
7C. ABS Axies (2)
8A. Acrylic Handles (2)
8C. ABS Plugs (2)
9C. Stainless Steel Handle Screws (2)
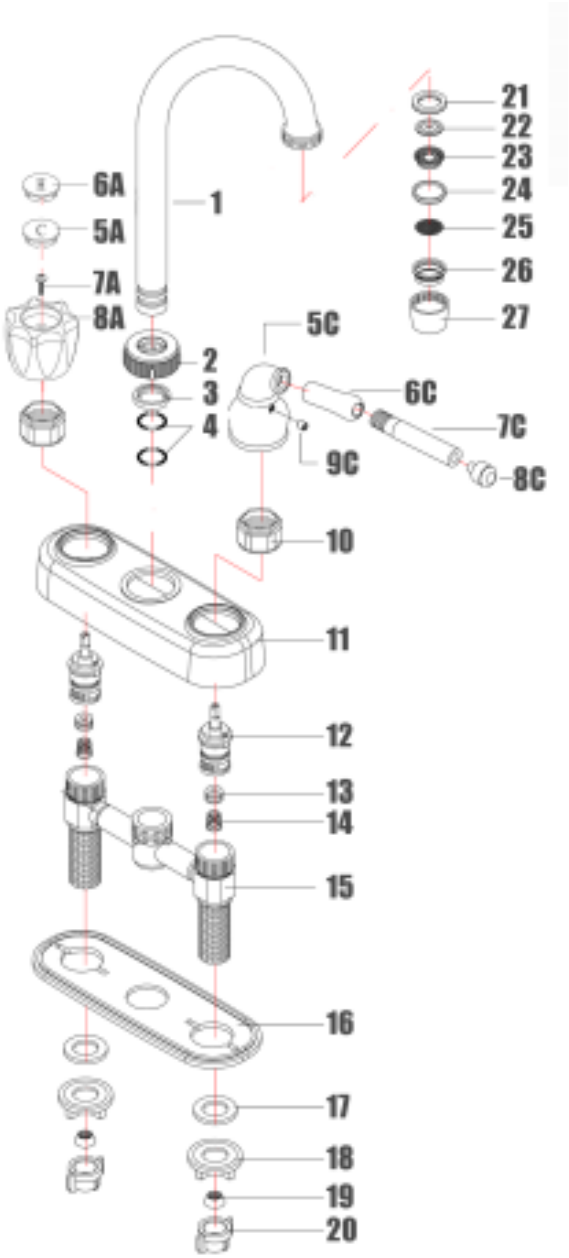
10. ABS Nuts (2)
11. ABS Escutcheon
12. POM/Rubber Stainless Steel Cartridge-Hot (2)
13. Rubber Washers (2)
14. Stainless Steel Springs (2)
15. POM/Rubber Body
16. PP Base Plate
17. Rubber Washers (2)
18. ABS Mounting Nuts (2)
19. Rubber Washers (2)
20. ABS Coupling Nuts (2)
21. Rubber Washers (2)
22. POM Flow Restrictor
23. POM Filter Nut
24. POM Ring
25. Stainless Steel Filter
26. POM Filter Seat
27. ABS Aerator Nut